Rosenberry's Septic Service
8885 Pineville Road, Shippensburg Pa 17257
Phone 717-532-4026 Fax 717-532-7229

1000 Gallon Open with 6" Walls, Floor, & Lid

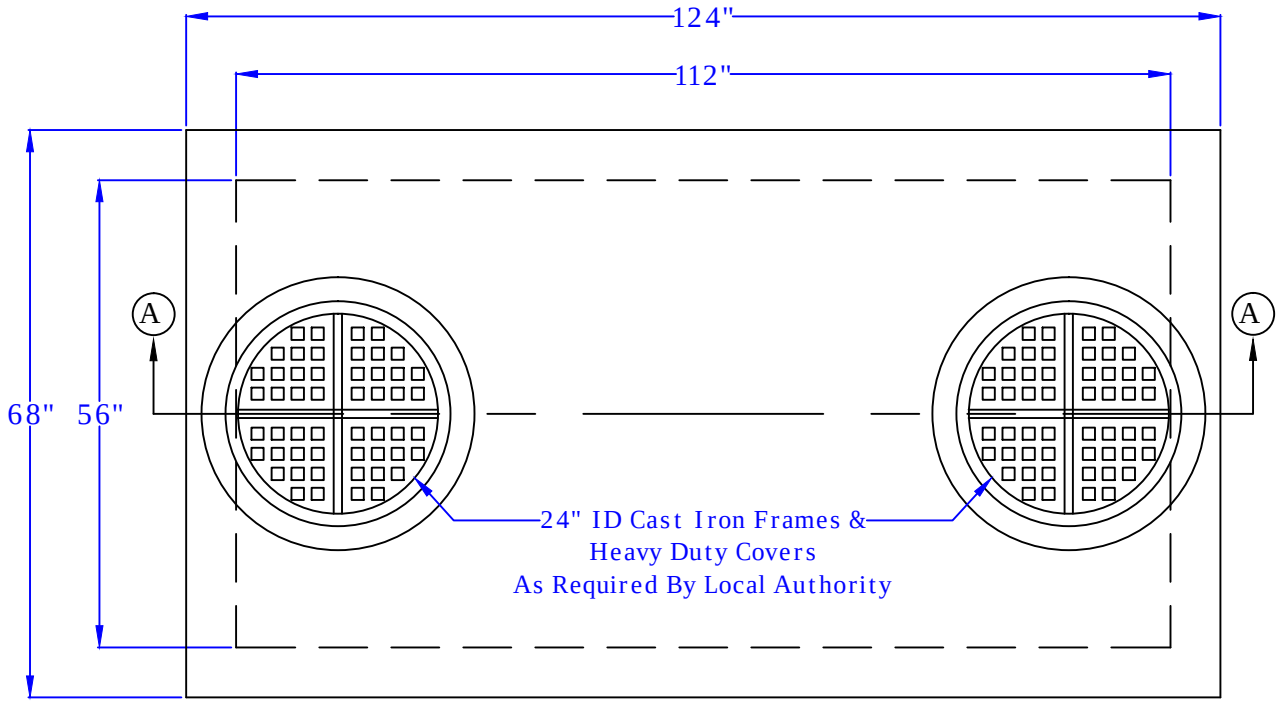

Plan View of Lid
No Scale

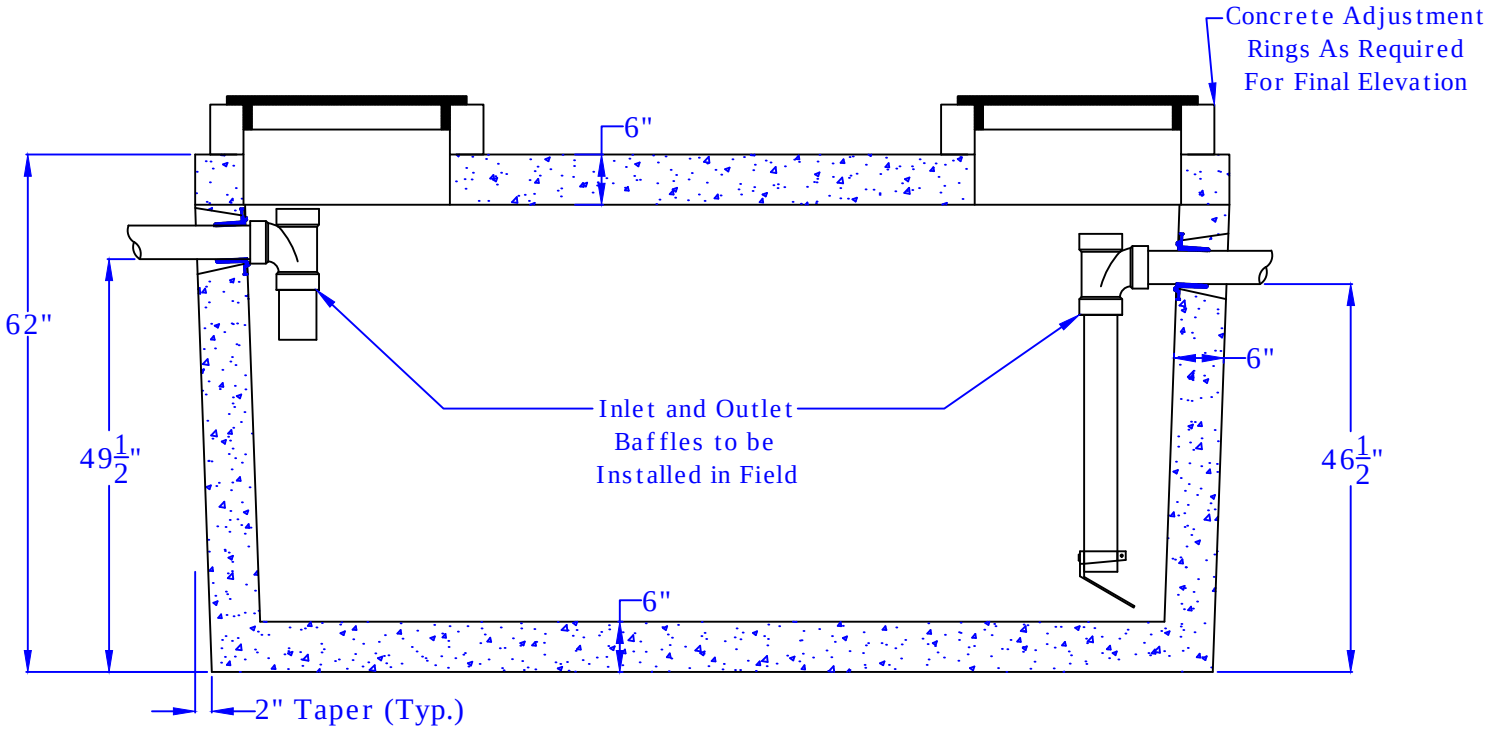

AA Section of 1000 Gallon Open Tank with 6" Walls, Floor, and Lid
No Scale

This drawing is for informational use only.
If you have any questions call Rosenberrys Septic Tank Service at 717-532-4026
Sept 2005, revised Jan 2015